AKC SERIES 20 Watts

KEY FEATURES

- Switching Power Module for PCB Mountable
- Fully Encapsulated Plastic Case
- Universal Input Range 90-264VAC, 47-440 Hz
- Regulated Output
- Low Ripple and Noise
- Small Size But Higher Wattage
- Screw Terminal For Optional
- CE, CB and UL Approval
- 3-Years Product Warranty

ELECTRICAL SPECIFICATIONS

Model No. (Single Output)		AKC-3.3S	AKC-5S	AKC-7.35S	AKC-9S	AKC-12S	AKC-15S	AKC-24S
Max output wattage (W)		14.85W	20W	20W	20W	20W	20W	20W
Output	Voltage (V.DC.)	3.3V	5V	7.35V	9V	12V	15V	24V
	Current (mA) max	4500	4000	2730	2230	1670	1340	840
	Voltage set accuracy	±2%	±2%	±2%	±2%	±2%	±2%	±2%
	Line Regulation (LL-HL) (typ.)	0.5%	0.5%	0.5%	0.5%	0.5%	0.5%	0.5%
	Load Regulation (0-100%) (typ.)	1%	1%	1%	1%	1%	1%	1%
	Minimum load	0%	0%	0%	0%	0%	0%	0%
	Efficiency (typ.)	75%	79%	82%	82%	83%	83%	84%
	Capacitor Load (max.)	25000 uF	13000 uF	2200 uF	1100 uF	920 uF	820 uF	600 uF

Model No. (Dual Output)		AKC-5D		AKC-12D		AKC-15D	
Max output wattage (W)		20W		20W		20W	
Output		Output 1	Output 2	Output 1	Output 2	Output 1	Output 2
	Voltage (V.DC.)	+5V	-5V	+12V	-12V	+15V	-15V
	Current (mA) max	2000	2000	833	833	667	667
	Voltage set accuracy	±2%		±2%		±2%	
	Line Regulation (LL-HL) (typ.)	±0.5%		±0.5%		±0.5%	
	Load Regulation (10-100%) (typ.)	±3%		±3%		±3%	
	Minimum load	0%		0%		0%	
	Efficiency (typ.)	79%		82%		82%	
	Capacitor Load (max.)	±4300 uF		±560 uF		±220 uF	

Model No. (Triple Output)		AKC-5S12D			AKC-5S15D		
Max output wattage (W)		20W			20W		
Output		Output 1	Output 2	Output 3	Output 1	Output 2	Output 3
	Voltage (V.DC.)	5	+12	-12	5	+15	-15
	Current (mA) max	2800	250	250	2800	200	200
	Voltage set accuracy	±2%	±2%		±2%	±2%	
	Line Regulation (LL-HL) (typ.)	1%	5%		1%	5%	
	Load Regulation (20-100%) (typ.)	2%	5%		2%	5%	
	Minimum load	10%			10%		
	Efficiency (typ.)	81%			81%		
	Capacitor Load (max.)	3500 uF / ±220 uF			3500 uF / ±150 uF		

AKC SERIES 20 Watts

Input	Voltage	90-264 VAC or 100-375 VDC
	Frequency (Hz)	47-440 Hz
	Current (Full load)	400 mA max. (115 VAC) / 270 mA max. (230 VAC)
	Inrush current (<2ms)	30 A max. (115 VAC) / 50 A max. (230 VAC)
	Leakage Current	0.25 mA
	External Fuse (recommend)	2 A slow blow type
	Power Saving	230V < 0.5W
Output	Ripple	<0.2% Vout +40mV max (Vp-p)
	Noise	<0.5% Vout +50mV max (Vp-p)
	Hold-up time (typ.)	13 ms min.
	Switching frequency	100 kHz
Protection	Over current protection	Above 105% rated output power
	Over voltage protection	Zener diode clamp
	Short circuit protection	Hiccup mode, indefinite (automatic recovery)
Isolation	Input-Output (V.AC)	3000V
	Input-FG (V.AC)	3000V
	Output-FG (V.AC)	500V
Environment	Operating temperature	-25°C…+70°C (with derating)
	Storage temperature	-40°C…+85°C
	Temperature coefficient	0.02%/°C
	Humidity	95% RH
	MTBF	>200,000 h @ 25°C (MIL-HDBK-217F)
Physical	Dimension (L x W x H)	2.76 x 1.89 x 0.87 Inches (70.0 x 48.0 x 22.0 mm) Tolerance ±0.5 mm
	Case Material	Plastic resin + Fiberglass (flammability to UL 94V-0)
	Weight	110 g
	Cooling method	Free air convection
Safety	Agency Approvals	CE, UL/cUL, CB
EMC	EMI (Conducted & Radiated Emission)	EN 55022 class B
	EMS (Noise Immunity)	EN 55024

1.All specifications valid at normal input voltage, full load and +25°C after warm-up time unless otherwise stated.

2.Ripple & Noise are measured at 20MHz of bandwidth with 0.1UF & 47UF parallel capacitor.

Note

1. The triple output required a minimum 10% loading on the output to maintain specified regulation. Operation under no-load condition will not damage these devices; however they may not meet all listed specification.

2. Load regulation for triple output:
   Main output (V1): 20% to 100% with 20% to 100% balanced on auxiliaries.
   Auxiliary outputs (V2 and V3): 20% to 100% balanced on all outputs.

3. Cross regulation for dual output: asymmetrical load 25% / 100% FL
   Cross regulation for triple output:
   Main output 100% load, auxiliary 100%,other auxiliary25% to 100%.
   Auxiliary outputs(V2 and V3):main output 100% load, auxiliary 100%, other auxiliary 25% to 100% or main output 25%,auxiliary 25%,other auxiliary 25% to 100%.

MECHANICAL DIMENSION (Top View)

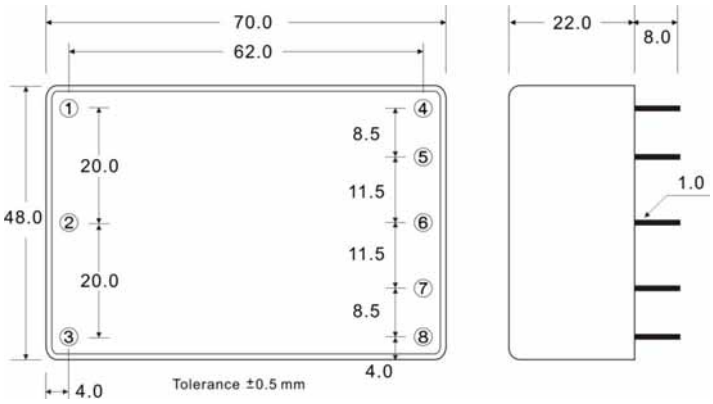

PIN#	SINGLE	Dual	Triple
1	FG	FG	FG
2	AC IN (N)	AC IN (N)	AC IN (N)
3	AC IN (L)	AC IN (L)	AC IN (L)
4	NO PIN	NO PIN	-DC OUT
5	-DC OUT	-DC OUT	COMMON
6	NO PIN	COMMON	+DC OUT
7	+DC OUT	+DC OUT	+5V RTN
8	NO PIN	NO PIN	+5V OUT

BLOCK DIAGRAM

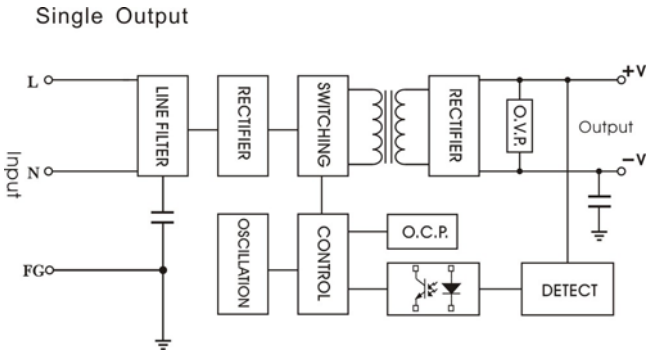

DERATING

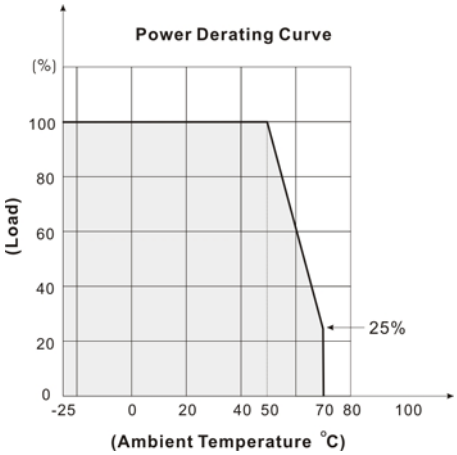

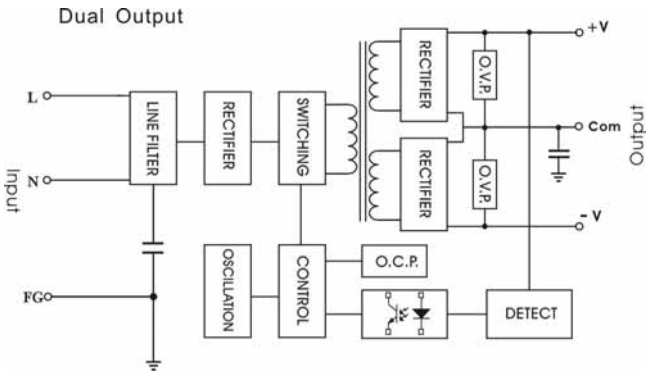

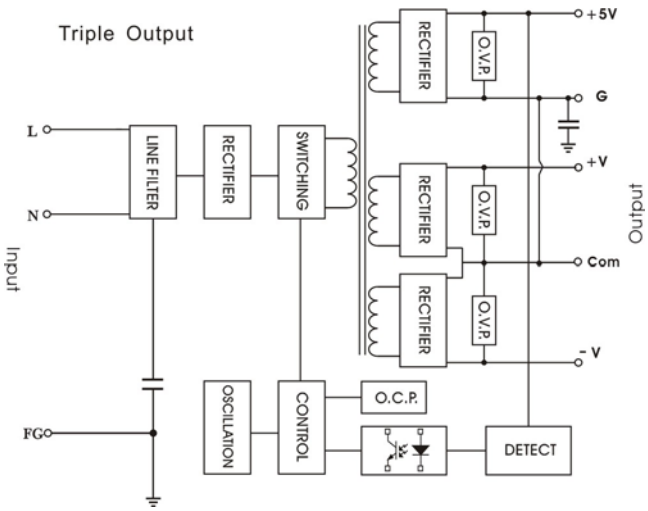

AKC SERIES 20 Watts

SCREW TERMINAL

AKC-A2

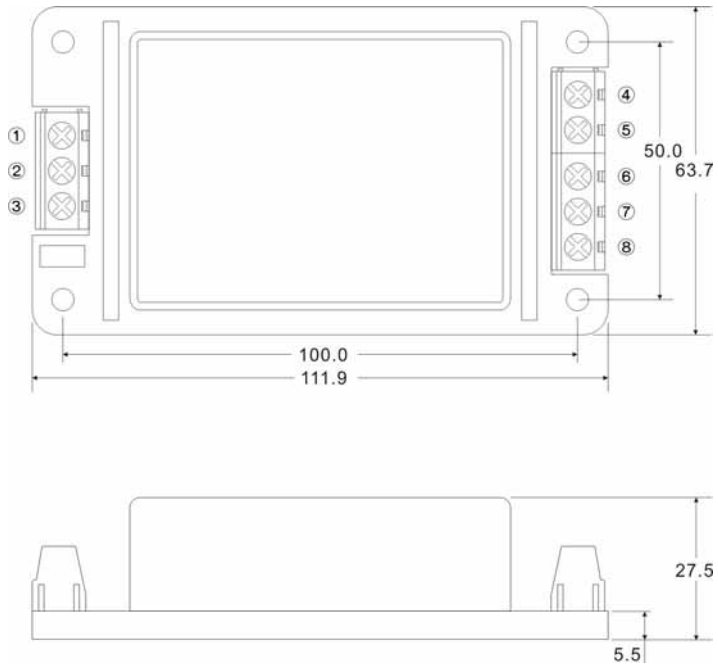

PIN#	Single	Dual	Triple
1	FG	FG	FG
2	AC IN (N)	AC IN (N)	AC IN (N)
3	AC IN (L)	AC IN (L)	AC IN (L)
4	NO CONNECT	NO CONNECT	-DC OUT
5	-DC OUT	-DC OUT	COMMON
6	NO CONNECT	COMMON	+DC OUT
7	+DC OUT	+DC OUT	+5V RTN
8	NO CONNECT	NO CONNECT	+5V OUT

AKC-A5

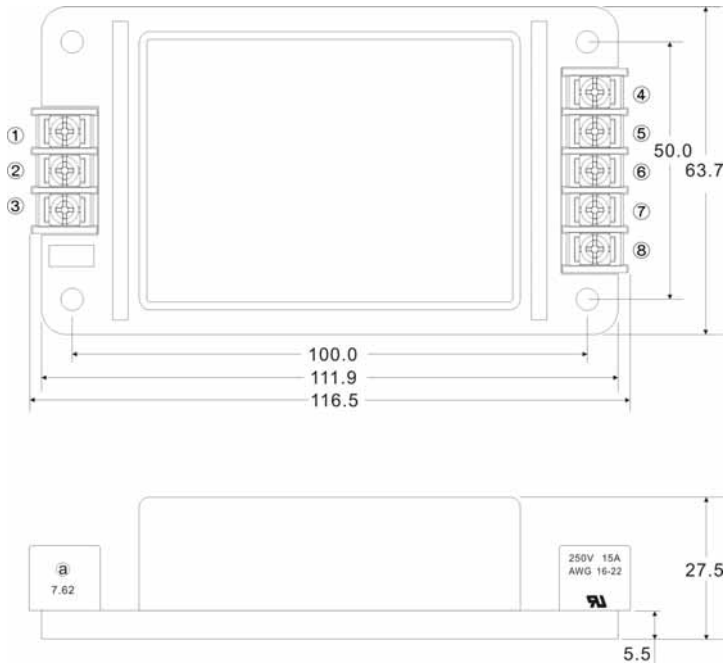

PIN#	Single	Dual	Triple
1	FG	FG	FG
2	AC IN (N)	AC IN (N)	AC IN (N)
3	AC IN (L)	AC IN (L)	AC IN (L)
4	NO CONNECT	NO CONNECT	-DC OUT
5	-DC OUT	-DC OUT	COMMON
6	NO CONNECT	COMMON	+DC OUT
7	+DC OUT	+DC OUT	+5V RTN
8	NO CONNECT	NO CONNECT	+5V OUT